Investigation for V-READY OFF on Alpha series

1-1, GENERAL

Check points commonly against V-RDY OFF alarm

Procedure depends on I/F type as follows on next page

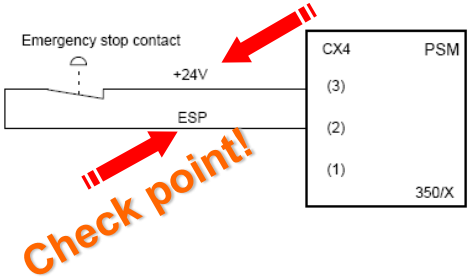

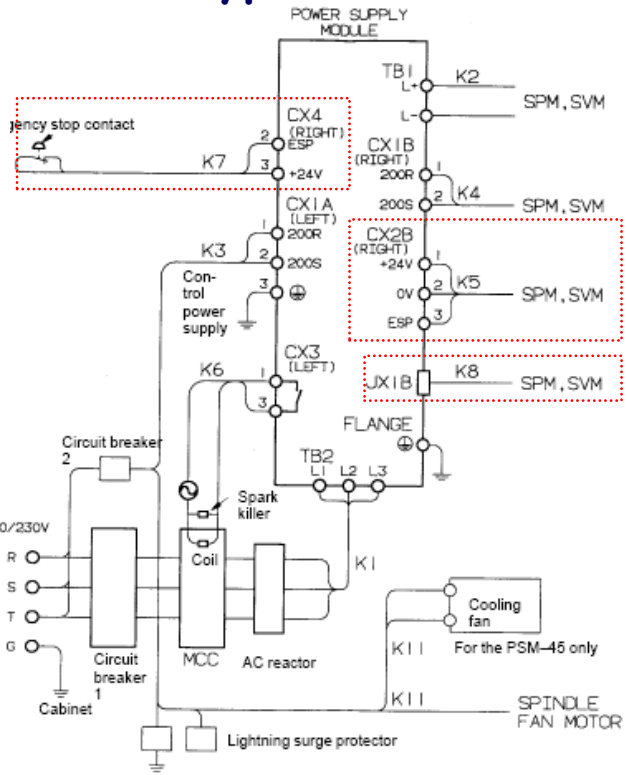

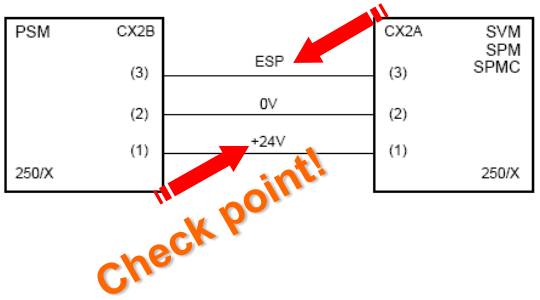

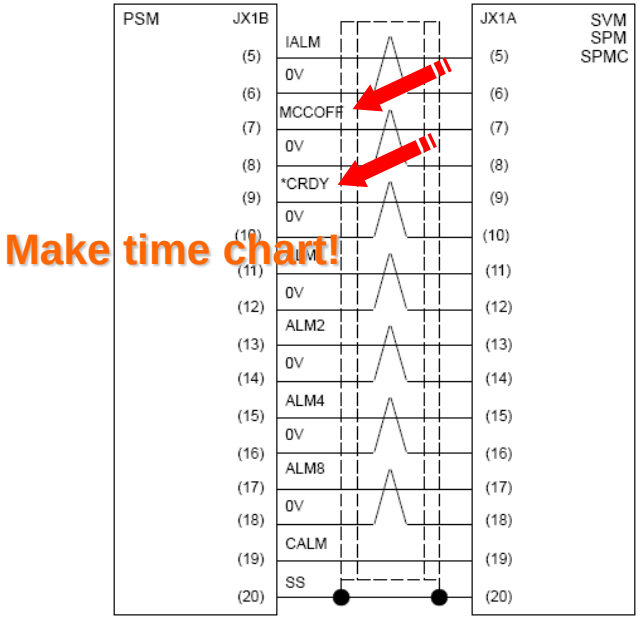

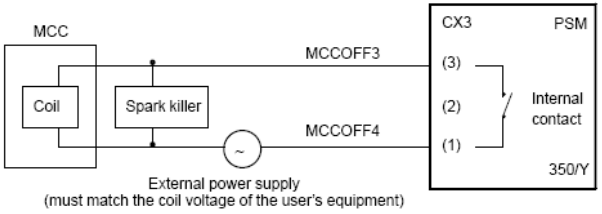

1-2, TYPE A

Check between CNC and Modules (exception FS0C, FS15A)

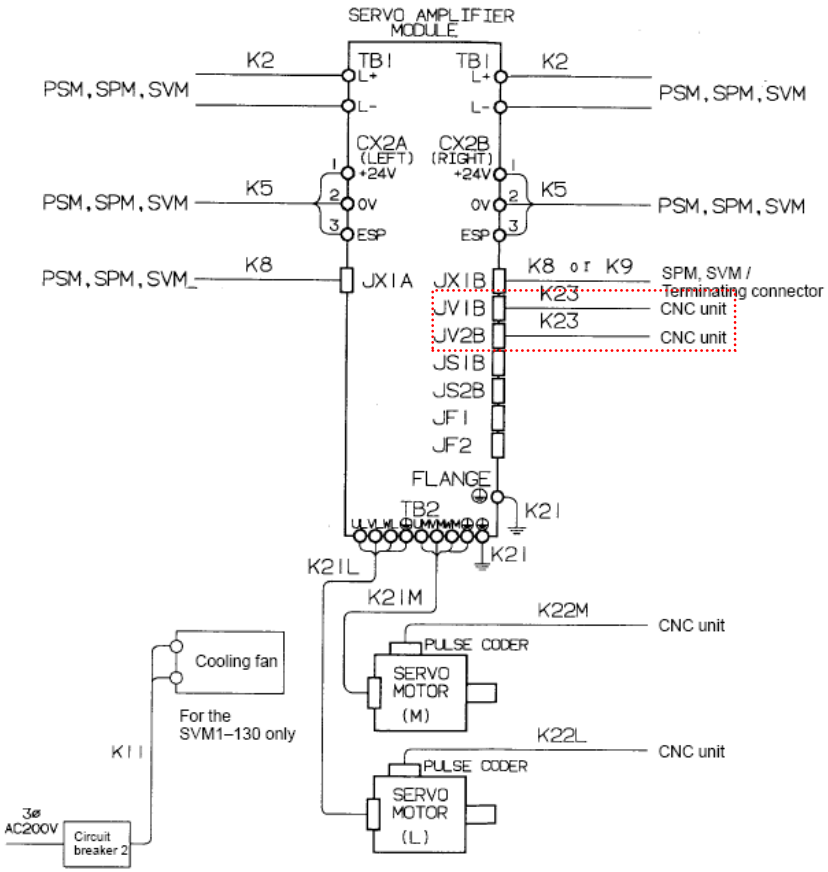

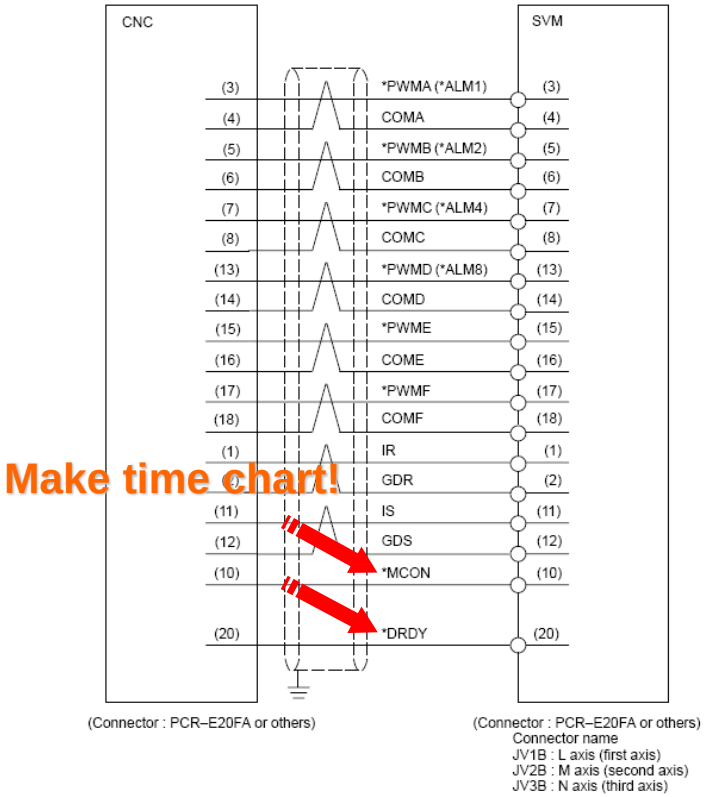

1-3, TYPE A

Check between CNC and Modules (for FS0C, FS15A)

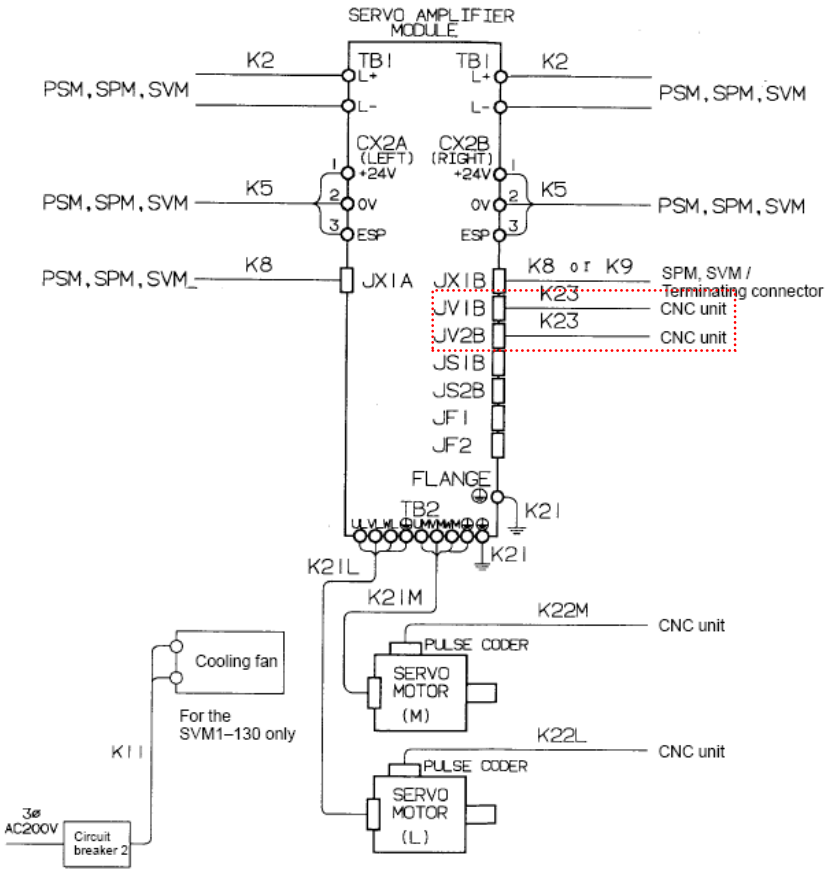

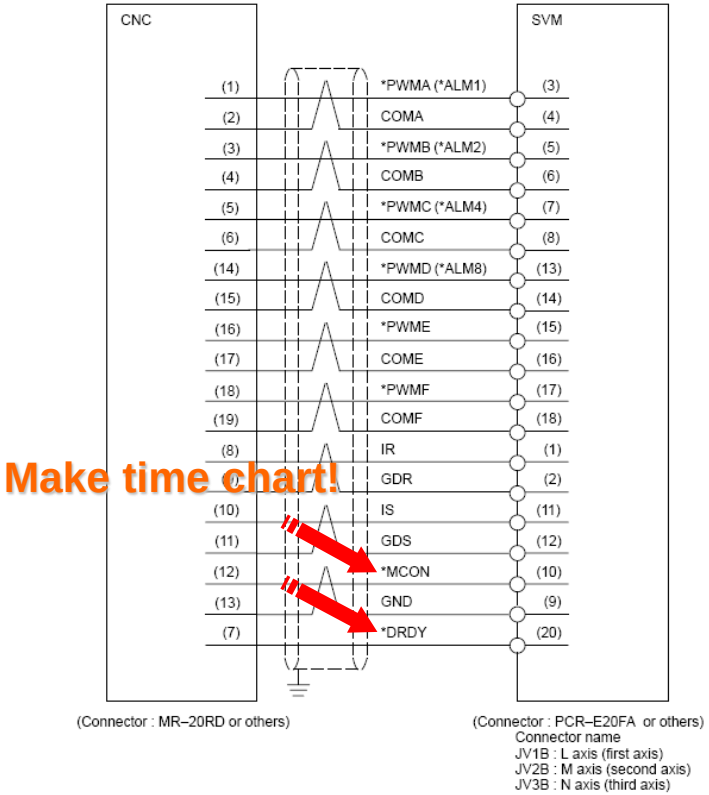

1-4, TYPE B

Check between CNC and Modules

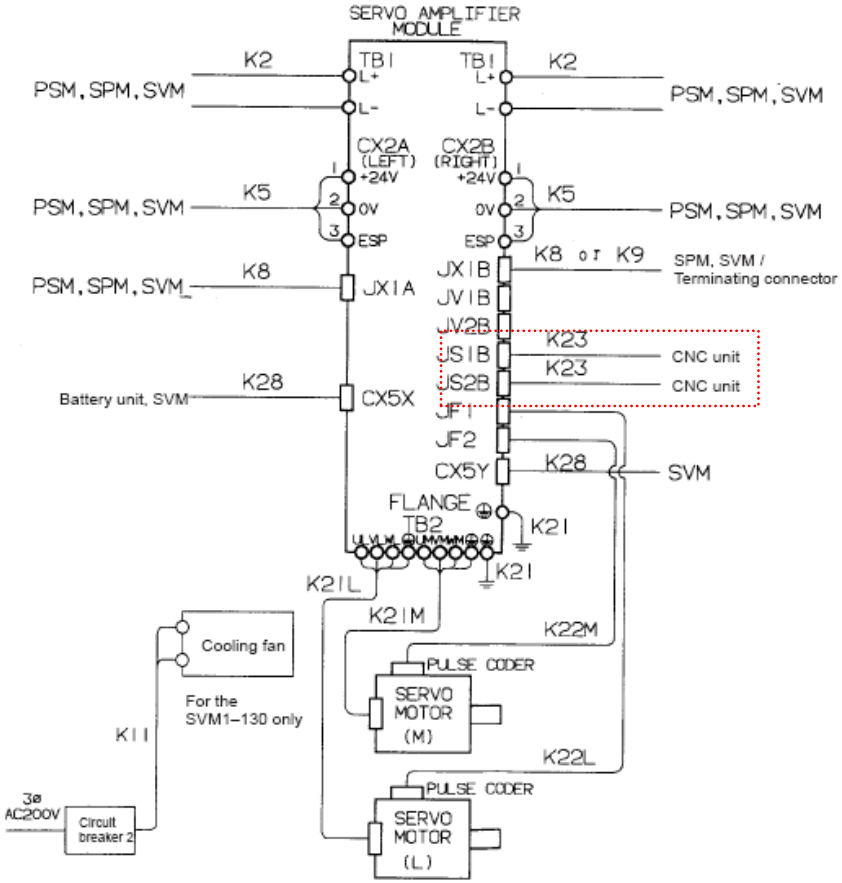

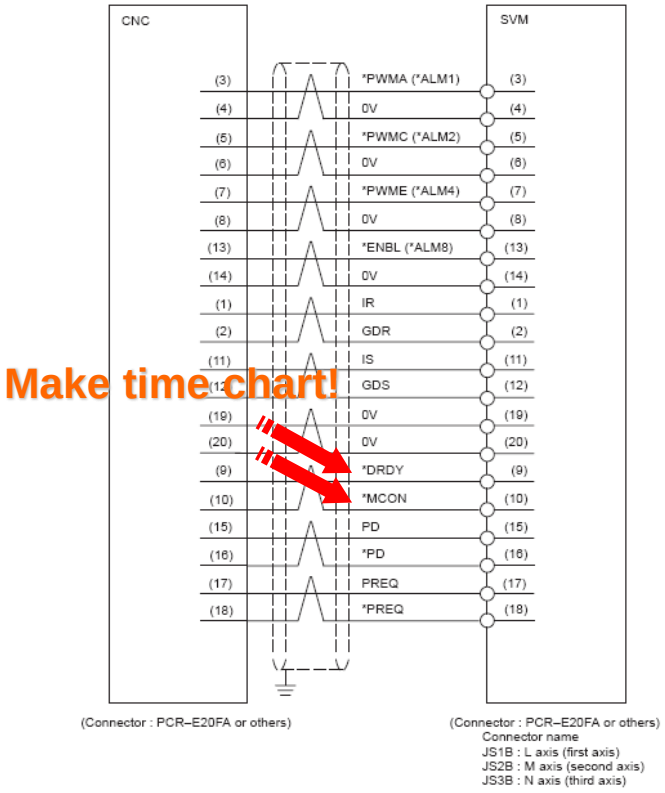

1-5, FSSB, TYPE A, TYPE B

Check between Modules mutually (Not between CNC and Modules)

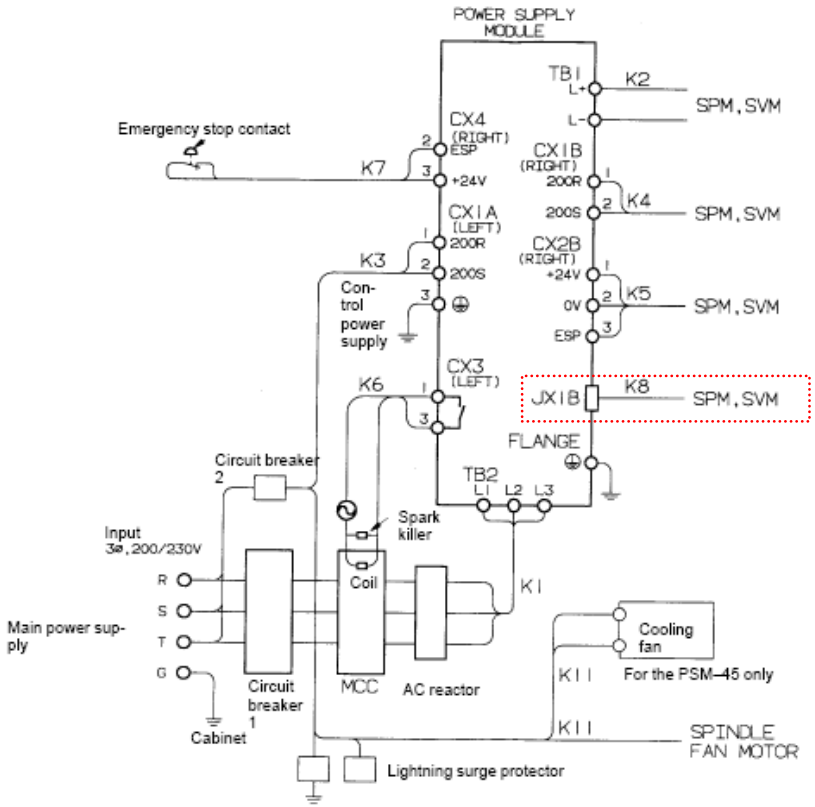

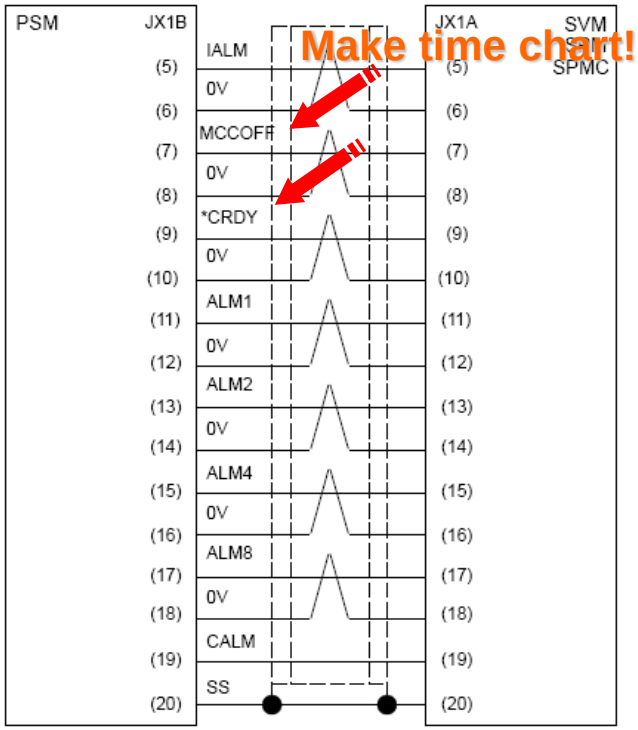

1-6, Others 1

How to investigate by killing axis on FSSB against V-RDY OFF alarm

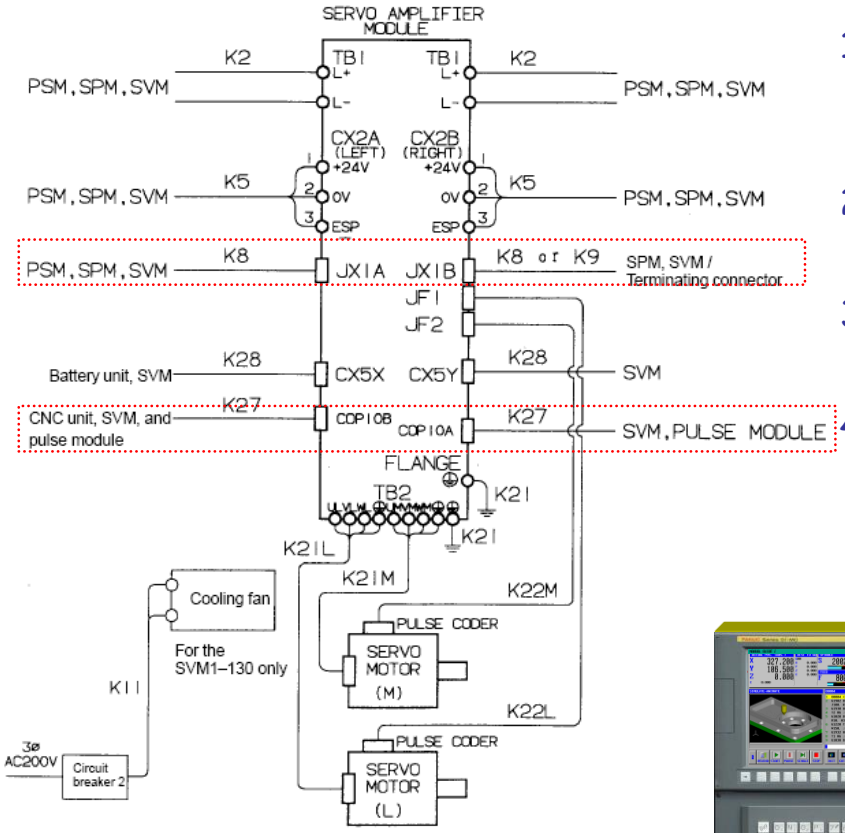

1. Kill assigned servo axis as parameter No.1023=-128 far from controller one by one, for easy understanding.
2. Follow above killed servo axis, Shift terminator position on the JX1 line
3. Kill communication signal on FSSB line as parameter No.1900s etc…
4. Follow above killed signal, Shift terminator position on the COP10 line

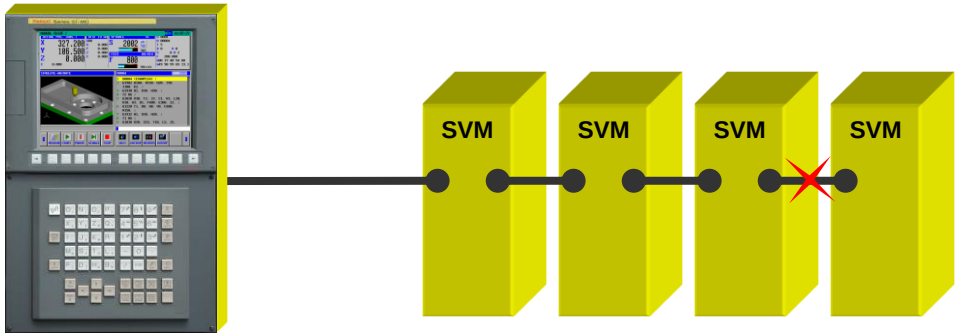

1-7, Others 2

Summary of checkable connector assignment on connector by structures

I/F	Amplifier	CNC to/from Modules	Module to/from Module	Check connector
TYPE A For FS0, FS15	6079 series (S1) 6085 series (S1)	JV1B: 12-XMCONL : 07-XDRDY	JX1B: 07-MCCOFFI : 09-XCRDY JX1A: 07-MCCOFFO : 09-XRDY	Unavailable
TYPE A Except for FS0, FS15	6079 series (S1) 6085 series (S1)	JV1B: 10-XMCONL : 20-XDRDY		Unavailable
TYPE B	6080 series 6079 series (S2) ** 6085 series (S2)	JS1B: 09-XRDY : 10-XMCONL		
FSSB	6096 series 6097 series	COP10A/B		JX5: 19-MCON : 20-DRDY
FSSB	6114, 6124 series 6117, 6127 series	COP10A/B	By Servo Guide see next chapter	JX5: 19-MCON : 20-DRDY

** No applicable SVM3 (A06B-6079-H3xx,) it is always TYPE A interface

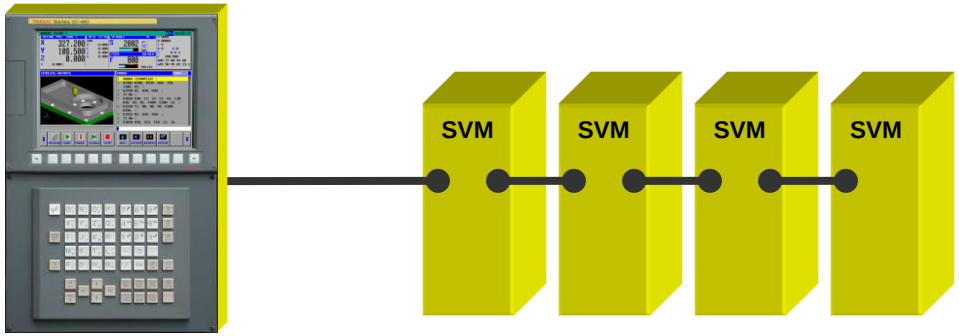

I'll check structures firstly
Type A, B or FSSB

Investigation for V-READY OFF on Alpha-*i* series

2-1, Servo Guide

How to set signals which concern v-ready off on Servo Guide

Signal explanation

HRDY : Servo On (demand)

MCON: Amp. On (demand)

DRDY : Amp. Ready (amplifier)

SRDY : Servo Ready (software)

90B0

(L)= PRM1023 odd number
(M)= PRM1023 even number

MCON, DRDY use with **ARB**

If ARB nor available use **TCMD**

This way needs also a parameter No.1023

90B0				90D0, 90E0		
Signal	Setting	Bit info.		Signal	Setting	Bit info.
HRDY (L) (M)	CTRL1	Bit 1		HRDY (L) (M) (J) (K)	CTRL1	Bit 1
MCON (L) (M)	Ext. 1864 1992	Bit 0		MCON (L) (M) (J) (K)	Ext. 1864 1992 8008 8136	Bit 0
DRDY (L) (M)	Ext.1865 1993	Bit 15		DRDY (L) (M) (J) (K)	Ext. 1865 1993 8009 8137	Bit 15
SRDY (L) (M)	STAT1	Bit 1		SRDY (L) (M) (J) (K)	STAT1	Bit 1

Diagnosis No.358 has anything else to inform under V-ready off alarm

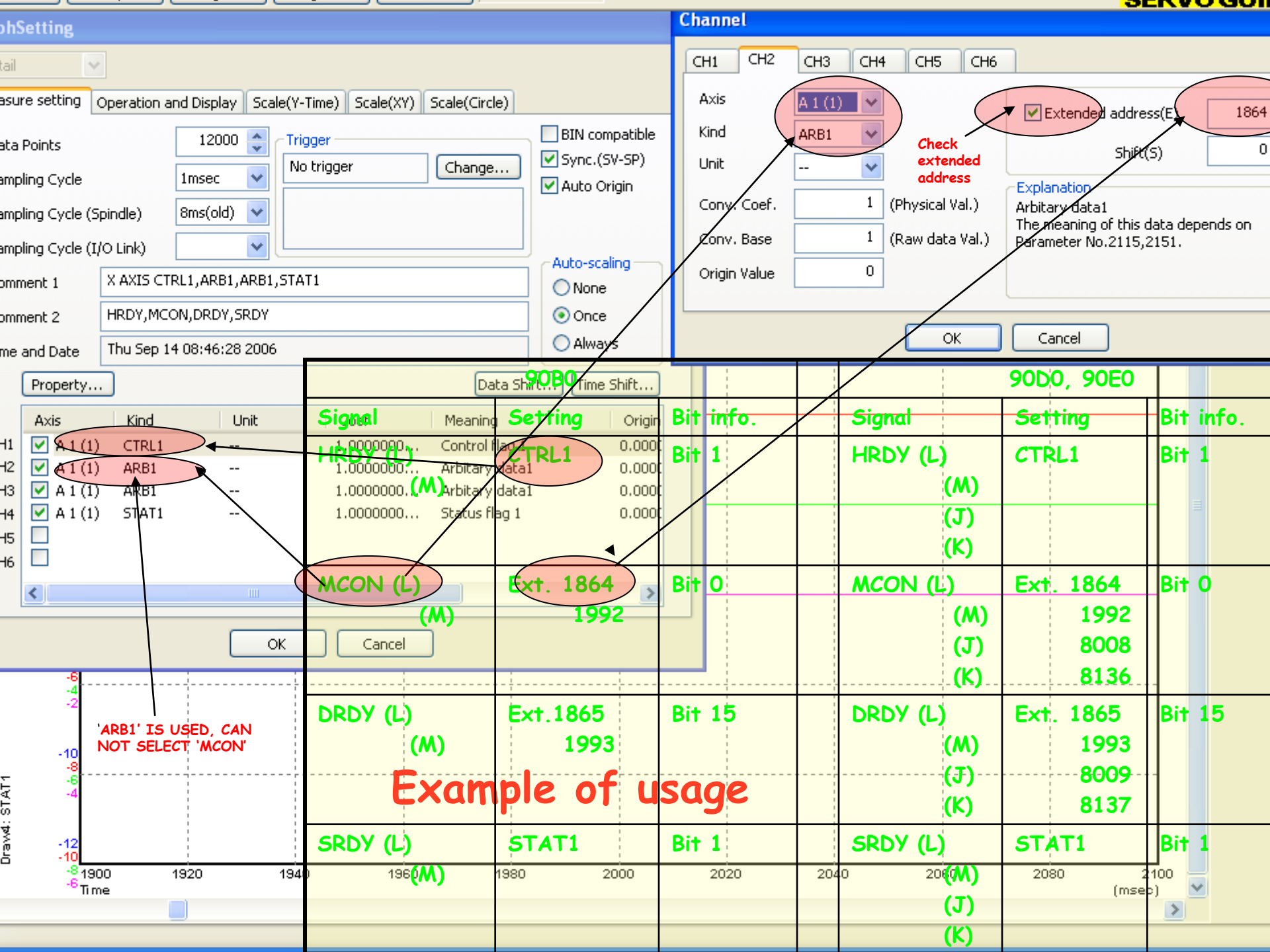
Channel
CH1 CH2 CH3 CH4 CH5 CH6
Axis A 1 (1)
Kind ARB1
Unit --
Conv. Coef. 1 (Physical Val.)
Conv. Base 1 (Raw data Val.)
Origin Value 0
Extended address(E) 1864
Shift(S) 0
Explanation
Arbitary data1
The meaning of this data depends on Parameter No.2115,2151.
OK Cancel
Check extended address
Data points 12000
Sampling Cycle 1msec
Sampling Cycle (Spindle) 8ms(old)
Sampling Cycle (I/O Link)
Comment 1 X AXIS CTRL1,ARB1,ARB1,STAT1
Comment 2 HRDY,MCON,DRDY,SRDY
Time and Date Thu Sep 14 08:46:28 2006
Trigger
No trigger
Change...
BIN compatible
Sync.(SV-SP)
Auto Origin
Auto-scaling
None
Once
Always
Property...
Axis Kind Unit
A 1 (1) CTRL1 --
A 1 (1) ARB1 --
A 1 (1) ARB1 --
A 1 (1) STAT1 --
'ARB1' IS USED, CAN NOT SELECT 'MCON'
Draw4: STAT1
Time
(msec)
90B0
90D0, 90E0
Signal Setting Bit info.
HRDY (L) (M) CTRL1 Bit 1
MCON (L) (M) Ext. 1864 1992 Bit 0
DRDY (L) (M) Ext.1865 1993 Bit 15
SRDY (L) (M) STAT1 Bit 1
Signal Setting Bit info.
HRDY (L) (M) (J) (K) CTRL1 Bit 1
MCON (L) (M) (J) (K) Ext. 1864 1992 8008 8136 Bit 0
DRDY (L) (M) (J) (K) Ext. 1865 1993 8009 8137 Bit 15
SRDY (L) (M) (J) (K) STAT1 Bit 1
Example of usage

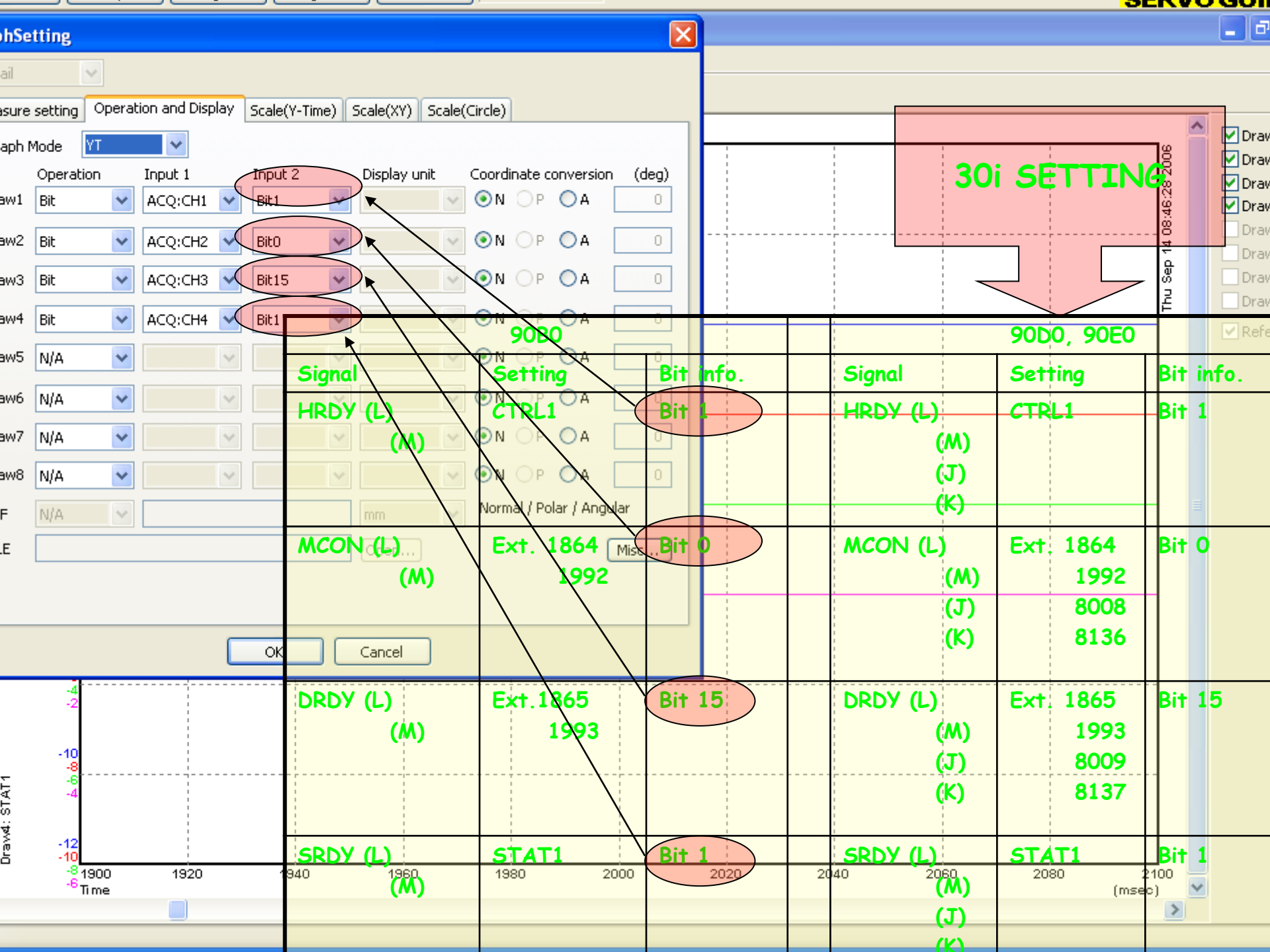
hSetting
sure setting
Operation and Display
Scale(Y-Time)
Scale(XY)
Scale(Circle)
aph Mode
YT
Operation
Input 1
Input 2
Display unit
Coordinate conversion
(deg)
aw1 Bit ACQ:CH1 Bit1
aw2 Bit ACQ:CH2 Bit0
aw3 Bit ACQ:CH3 Bit15
aw4 Bit ACQ:CH4 Bit1
aw5 N/A
aw6 N/A
aw7 N/A
aw8 N/A
Normal / Polar / Angular
OK
Cancel
30i SETTING
90B0
Signal
Setting
Bit info.
HRDY (L)
(M)
CTRL1
Bit 1
MCON (L)
(M)
Ext. 1864
1992
Bit 0
DRDY (L)
(M)
Ext.1865
1993
Bit 15
SRDY (L)
(M)
STAT1
Bit 1
90D0, 90E0
Signal
Setting
Bit info.
HRDY (L)
(M)
(J)
(K)
CTRL1
Bit 1
MCON (L)
(M)
(J)
(K)
Ext. 1864
1992
8008
8136
Bit 0
DRDY (L)
(M)
(J)
(K)
Ext. 1865
1993
8009
8137
Bit 15
SRDY (L)
(M)
(J)
(K)
STAT1
Bit 1
Draw4: STAT1
Time
(msec)
Thu Sep 14 08:46:28 2006

2-1, Servo Guide

How to set signals which concern v-ready off on Servo Guide system 30i

Signal explanation for 30i

HRDY : Servo On (demand)

MCON: Amp. On (demand)

DRDY : Amp. Ready (amplifier)

SRDY : Servo Ready (software)

Vready Off	1	2	3	4
L 4n-3	1	5	9	13
M 4n-2	2	6	10	14
J 4n-1	3	7	11	15
K 4n-0	4	8	12	16

30I setting

Check para 1023

		Para 1023
L	ODD	1
M	EVEN	2
L	ODD	3

21,18,16